Figure 2: Pedigrees and Haplotypes of VP families with other mutations

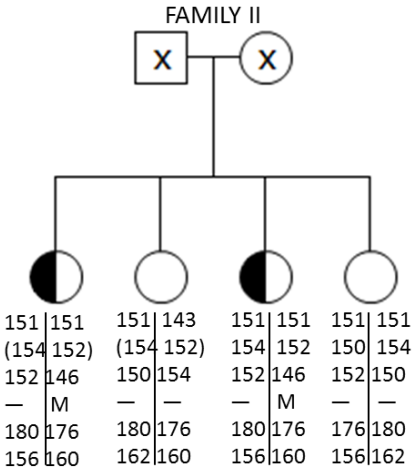

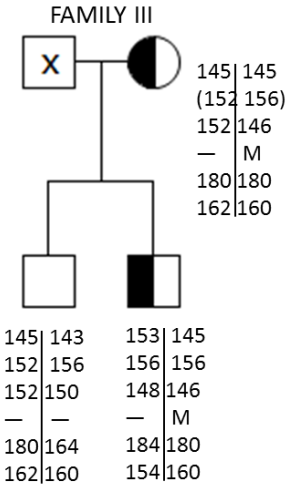

FAMILY VI

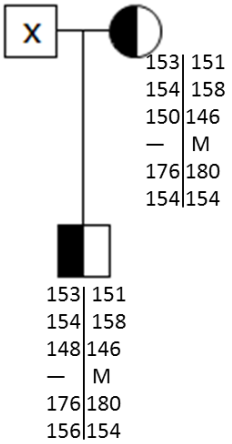

FAMILY XXI

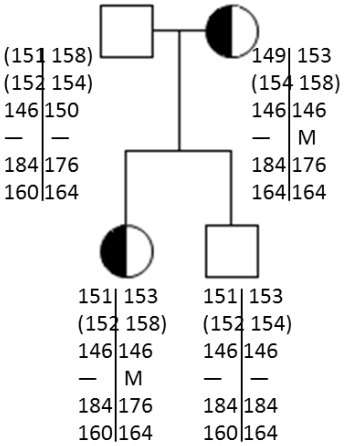

FAMILY XXIII

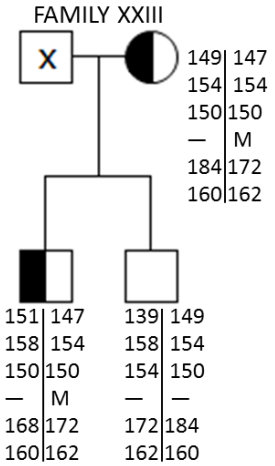

FAMILY XXIV

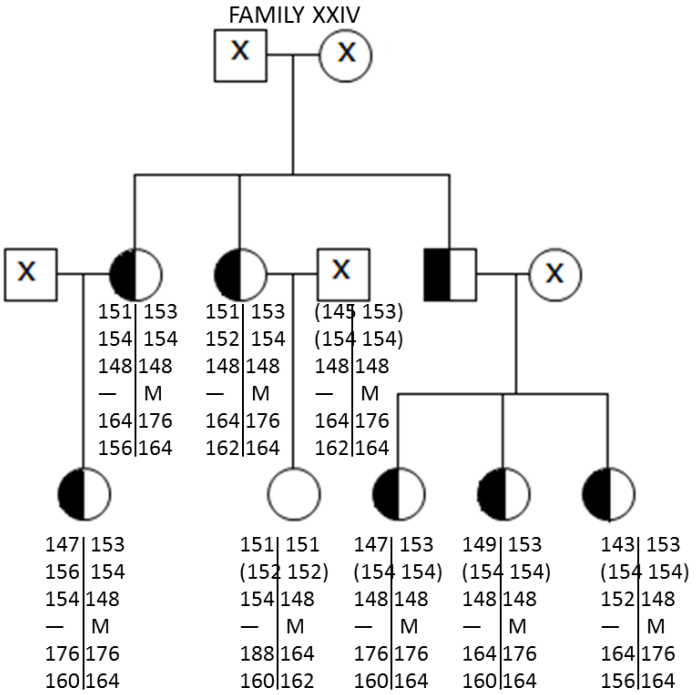

FAMILY XXVI

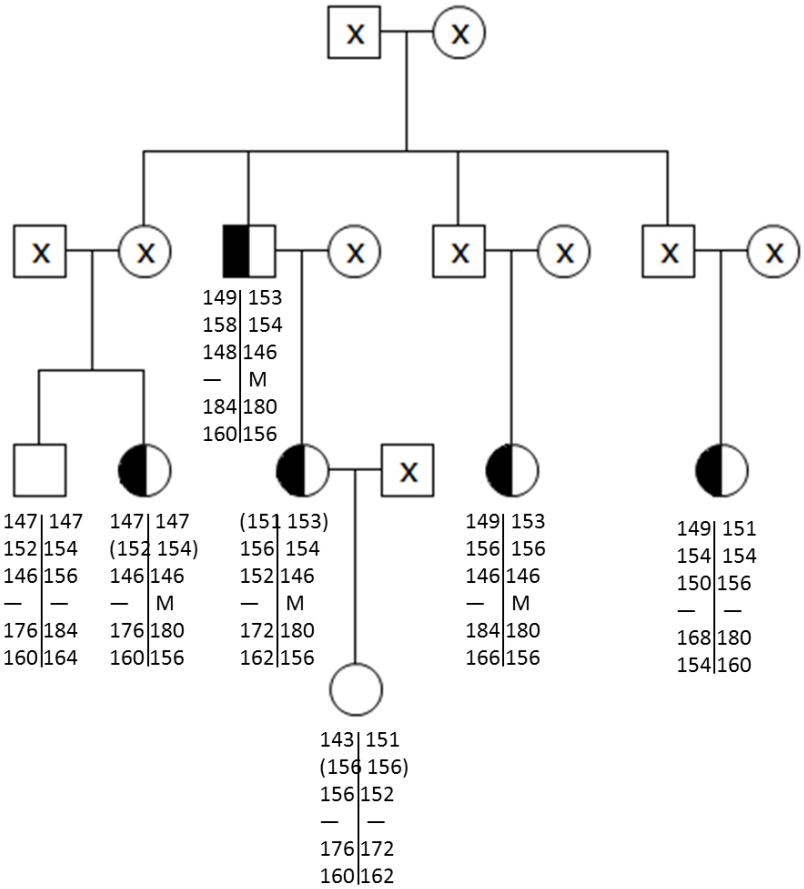
X
X
X
X
X
X
X
X
X
X
149 153
158 154
148 146
— M
184 180
160 156
147 147
152 154
146 156
— —
176 184
160 164
147 147
(152 154)
146 146
— M
176 180
160 156
(151 153)
156 154
152 146
— M
172 180
162 156
149 153
156 156
146 146
— M
184 180
166 156
149 151
154 154
150 156
— —
168 180
154 160
143 151
(156 156)
156 152
— —
176 172
160 162

FAMILY XXX

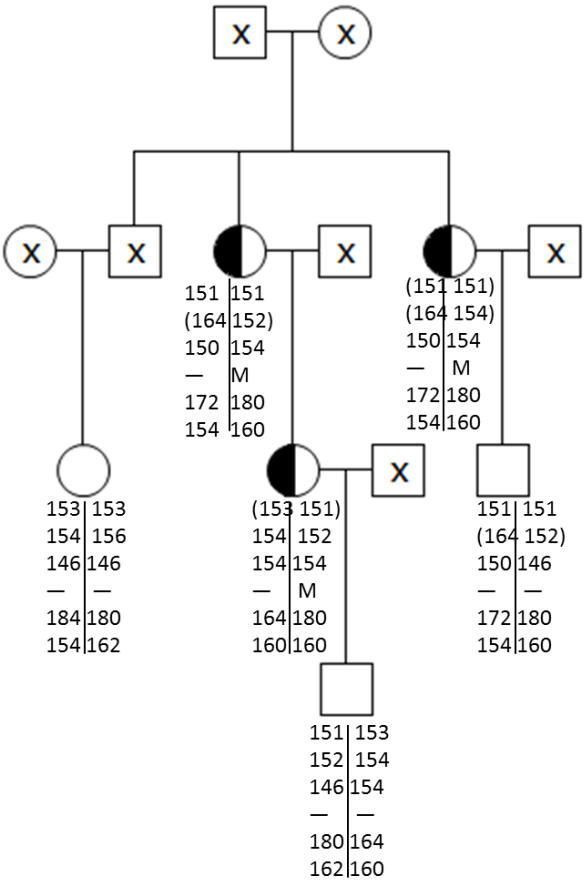
X
X
X
X
X
X
X
151 151
(164 152)
150 154
— M
172 180
154 160
(151 151)
(164 154)
150 154
— M
172 180
154 160
X
153 153
154 156
146 146
— —
184 180
154 162
(153 151)
154 152
154 154
— M
164 180
160 160
151 151
(164 152)
150 146
— —
172 180
154 160
151 153
152 154
146 154
— —
180 164
162 160

FAMILY XXXII

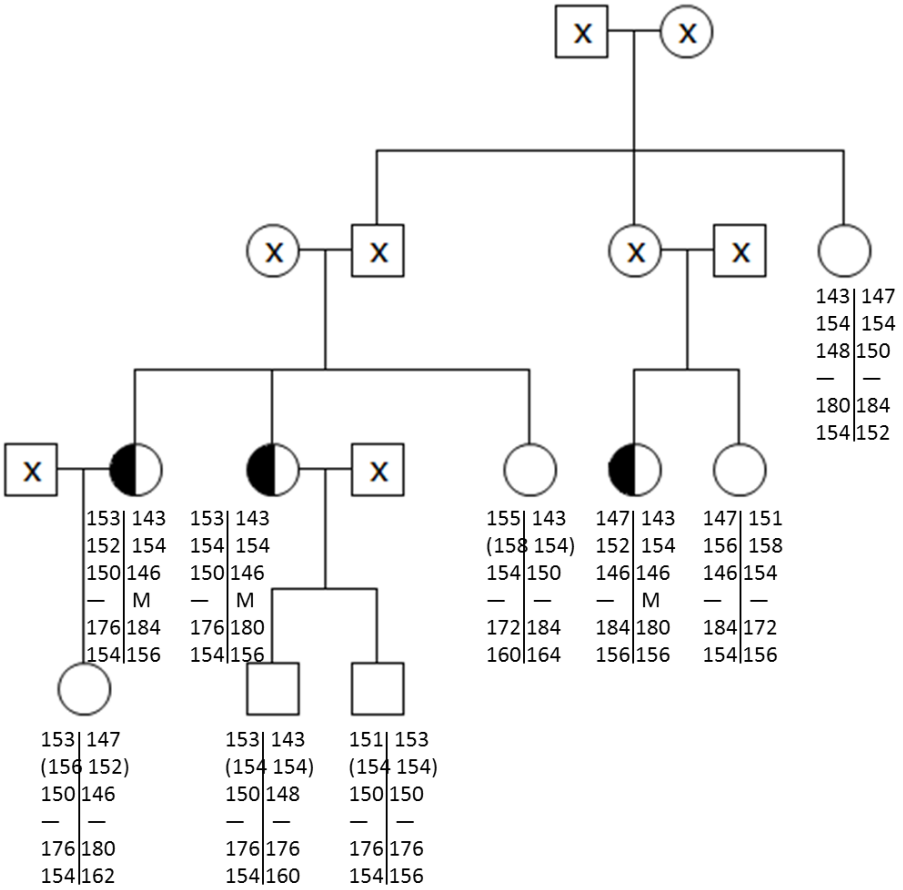

FAMILY XXXIII

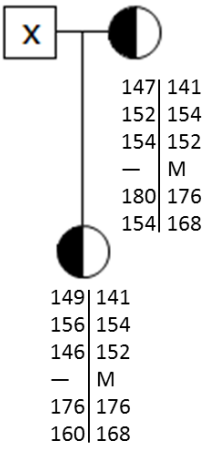
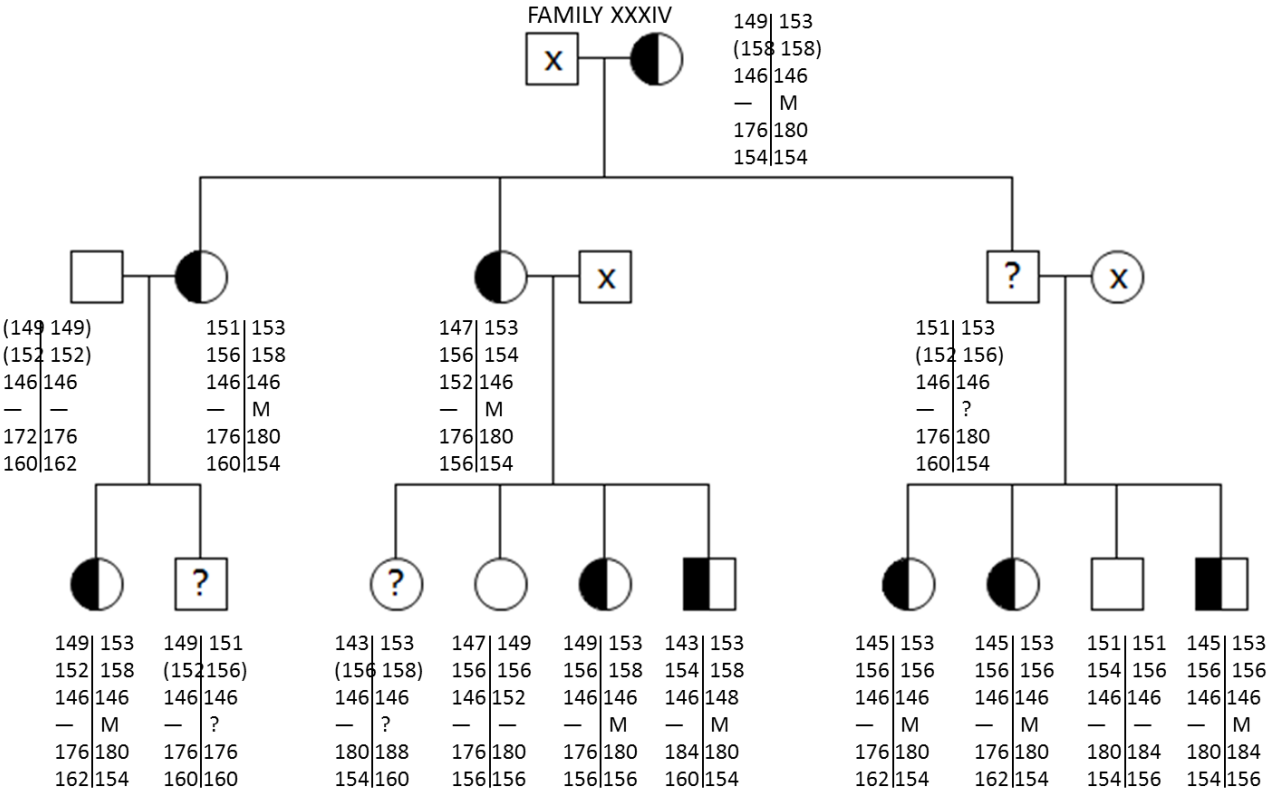
FAMILY XXXIV