Supplementary Figure 1. Comparison of GO-based classification of urinary proteins in AD and control groups. Top 10 represented GO annotations for the categories of (A) cellular component, (B) biological process, and (C) molecular function.

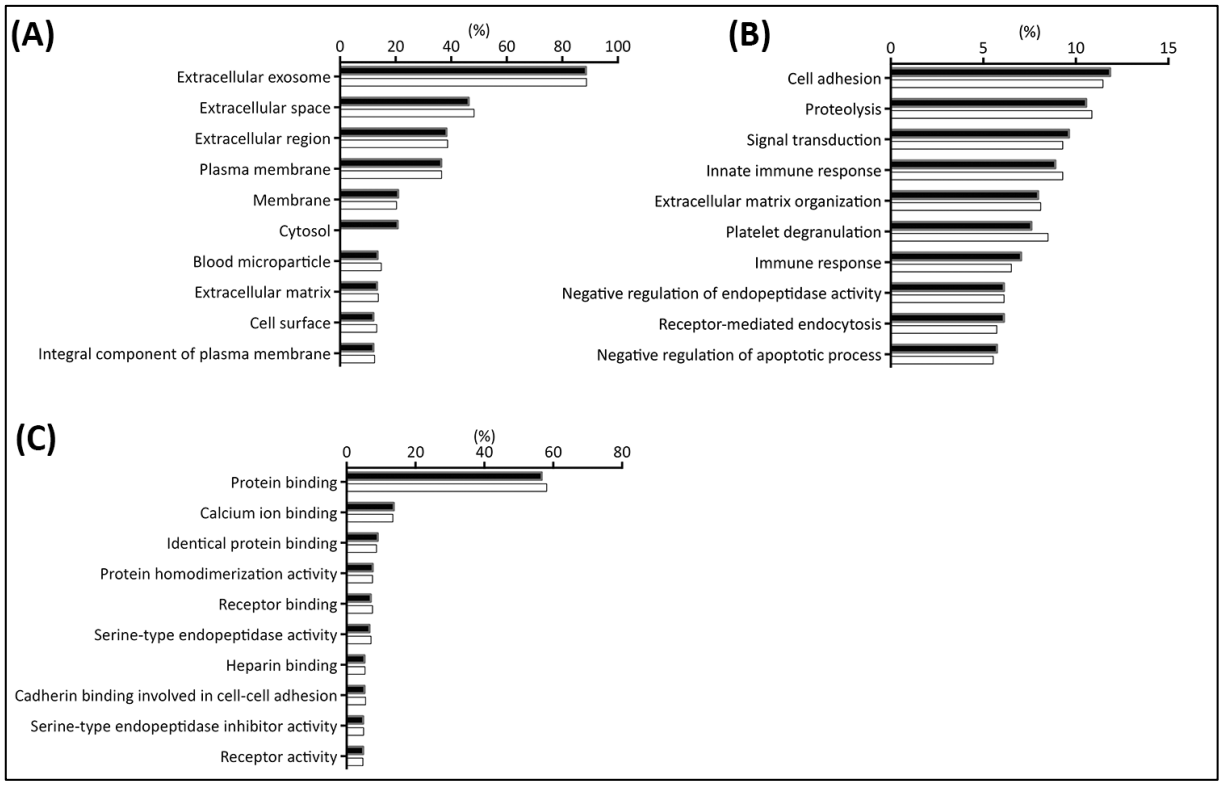

Supplementary Figure 2. Representative maps of the KEGG pathway included in the enriched clusters shown in Table 3. Pathway maps of (A) lysosome, (B) complement and coagulation cascades, and (C) carbon metabolism. Red objects represent differentially expressed proteins in the urinary proteome. Green objects represent human proteins in the KEGG database.

(A)

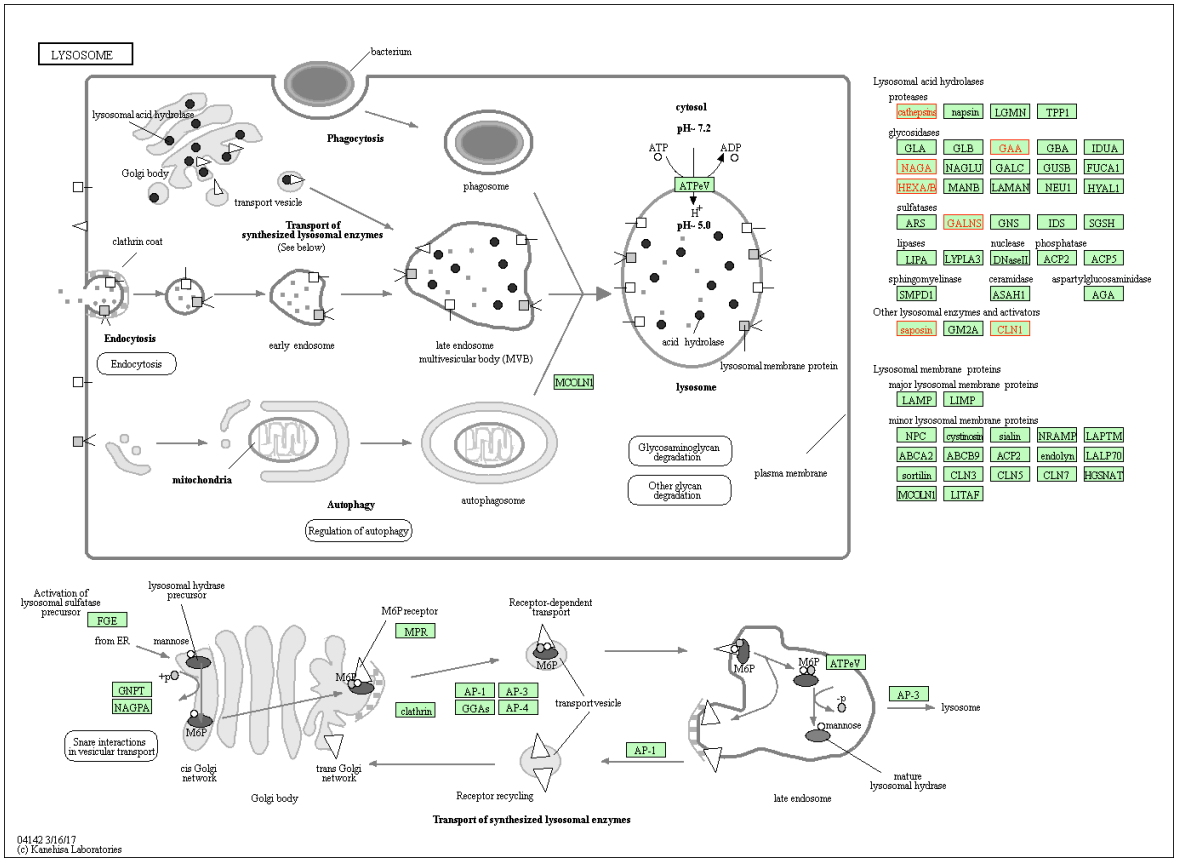

(B)

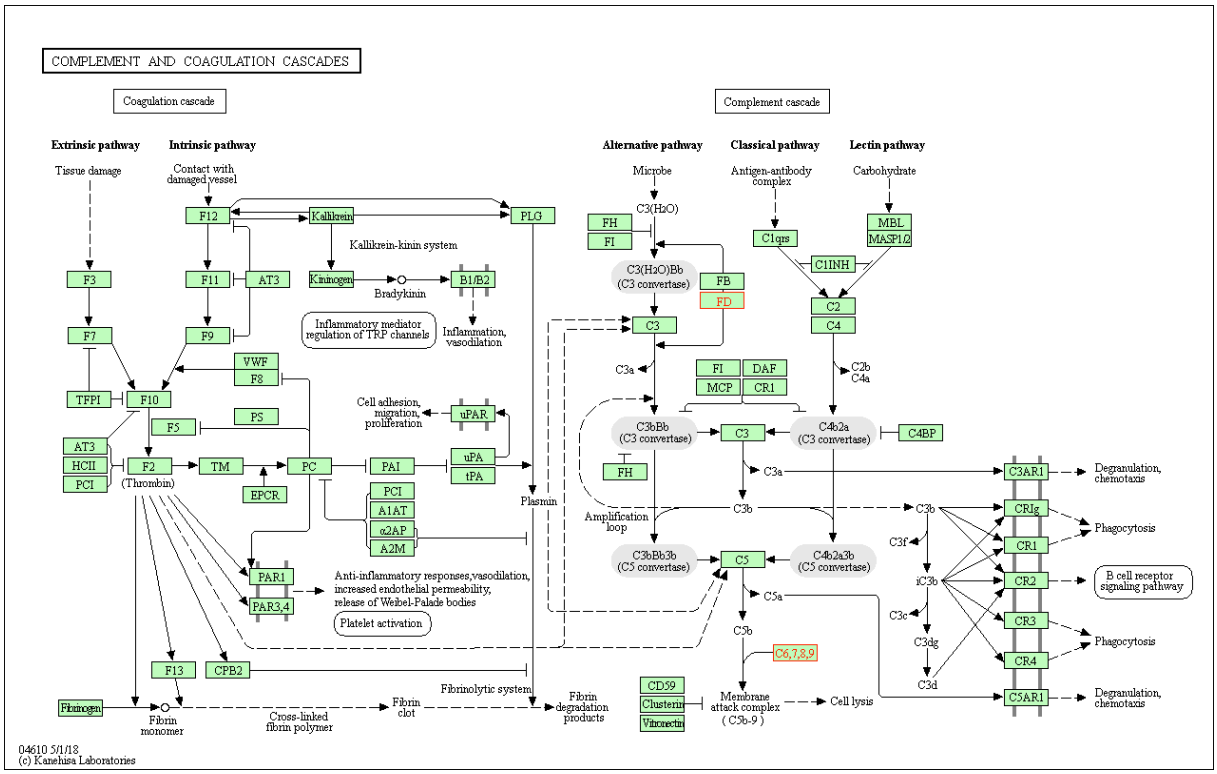
COMPLEMENT AND COAGULATION CASCADES
Coagulation cascade
Complement cascade
Extrinsic pathway
Intrinsic pathway
Alternative pathway
Classical pathway
Lectin pathway
Tissue damage
Contact with damaged vessel
Microbe
Antigen-antibody complex
Carbohydrate
F12
Kallikrein
PLG
Kallikrein-kinin system
F3
F11
AT3
Kininogen
Bradykinin
B1/B2
Inflammatory mediator regulation of TRP channels
Inflammation, vasodilation
F7
F9
VWF
F8
TFPI
F10
F5
PS
Cell adhesion, migration, proliferation
uPAR
AT3
HCII
PCI
F2
(Thrombin)
TM
PC
PAI
uPA
tPA
EPCR
PCI
A1AT
α2AP
A2M
Plasmin
PAR1
PAR3,4
Anti-inflammatory responses,vasodilation, increased endothelial permeability, release of Weibel-Palade bodies
Platelet activation
F13
CPB2
Fibrinolytic system
Fibrinogen
Fibrin monomer
Cross-linked fibrin polymer
Fibrin clot
Fibrin degradation products
C3(H2O)
FH
FI
C3(H2O)Bb (C3 convertase)
FB
FD
C3
C3a
FI
DAF
MCP
CR1
C3bBb (C3 convertase)
C3
C4b2a (C3 convertase)
C4BP
FH
C3a
C3b
Amplification loop
C3bBb3b (C5 convertase)
C5
C4b2a3b (C5 convertase)
C5a
C5b
C6,7,8,9
CD59
Clusterin
Vitronectin
Membrane attack complex (C5b-9)
Cell lysis
C1qrs
C1INH
MBL
MASP1/2
C2
C4
C2b
C4a
C3AR1
Degranulation, chemotaxis
CRIg
Phagocytosis
CR1
CR2
B cell receptor signaling pathway
CR3
Phagocytosis
CR4
C5AR1
Degranulation, chemotaxis
C3b
C3f
iC3b
C3c
C3dg
C3d
04610 5/1/18
(c) Kanehisa Laboratories

(C)

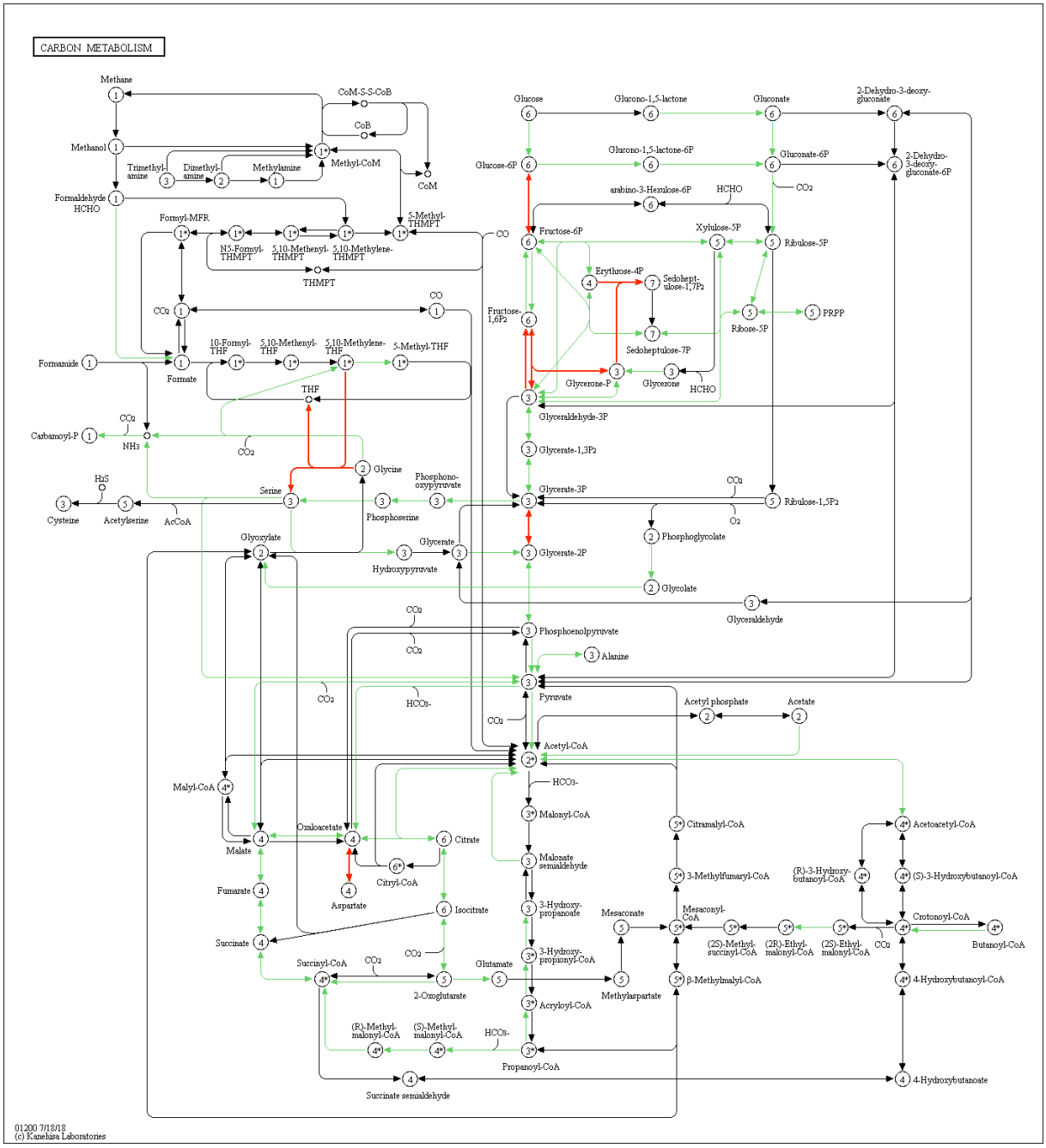
CARBON METABOLISM
Methane
CoM-S-S-CoB
CoB
Methanol
Trimethyl-amine
Dimethyl-amine
Methylamine
Methyl-CoM
CoM
Formaldehyde
HCHO
Formyl-MFR
5-Methyl-THMPT
CO
N5-Formyl-THMPT
5,10-Methenyl-THMPT
5,10-Methylene-THMPT
THMPT
CO2
CO
Formamide
Formate
10-Formyl-THF
5,10-Methenyl-THF
5,10-Methylene-THF
5-Methyl-THF
THF
Carbamoyl-P
NH3
H2S
Cysteine
Acetylserine
AcCoA
Serine
Glycine
Phosphono-oxypyruvate
Phosphoserine
Glyoxylate
Glycerate
Hydroxypyruvate
Glucose
Glucono-1,5-lactone
Gluconate
2-Dehydro-3-deoxy-gluconate
Glucose-6P
Glucono-1,5-lactone-6P
Gluconate-6P
2-Dehydro-3-deoxy-gluconate-6P
arabino-3-Hexulose-6P
HCHO
Fructose-6P
Xylulose-5P
Ribulose-5P
Erythrose-4P
Sedohept-ulose-1,7P2
Fructose-1,6P2
Ribose-5P
PRPP
Sedoheptulose-7P
Glycerone-P
Glycerone
Glyceraldehyde-3P
Glycerate-1,3P2
Glycerate-3P
Ribulose-1,5P2
O2
Phosphoglycolate
Glycerate-2P
Glycolate
Glyceraldehyde
Phosphoenolpyruvate
Alanine
Pyruvate
HCO3-
Acetyl phosphate
Acetate
Acetyl-CoA
Malonyl-CoA
Malonate semialdehyde
3-Hydroxy-propanoate
3-Hydroxy-propionyl-CoA
Acryloyl-CoA
Propanoyl-CoA
Malyl-CoA
Malate
Oxaloacetate
Citrate
Citryl-CoA
Aspartate
Fumarate
Isocitrate
Succinate
Succinyl-CoA
2-Oxoglutarate
Glutamate
Methylaspartate
Succinate semialdehyde
(R)-Methyl-malonyl-CoA
(S)-Methyl-malonyl-CoA
Citramalyl-CoA
3-Methylfumaryl-CoA
Mesaconate
Mesaconyl-CoA
(2S)-Methyl-succinyl-CoA
(2R)-Ethyl-malonyl-CoA
(2S)-Ethyl-malonyl-CoA
β-Methylmalyl-CoA
Acetoacetyl-CoA
(R)-3-Hydroxy-butanoyl-CoA
(S)-3-Hydroxybutanoyl-CoA
Crotonoyl-CoA
Butanoyl-CoA
4-Hydroxybutanoyl-CoA
4-Hydroxybutanoate
01200 7/18/18
(c) Kanehisa Laboratories